Smart SAM3T
User Guide

www.wavecom.com.au

Revision History

Version	Modified By	Date	Description
1.0		07/07/2013	Initial version
1.1		21/07/2014	
1.2		24/10/2014	
1.3		03/11/2014	
1.4		27/01/2015	
1.41		20/02/2015	
1.5	VP	10/04/2015	Update manual to version 1.5
1.51	VP	05/05/2015	Update manual to version 1.51
1.52	SV	19/05/2015	Added USB port in the manual

Contents

1 Introduction

The Smart SAM3T is a compact, light-weight, GSM/GPRS/EDGE/UMTS/HSPA+ based modem. It provides GSM,GPRS,UMTS and HSPA+ connectivity.

The Smart SAM3T is designed for both mobile and fixed M2M applications. It has an RJ45 socket for input voltage and the serial RS232 signals, an FME-male for antenna connection, a SIM holder and an LED indicator.

The Smart SAM3T is capable of sending/receiving SMS, Circuit switched data and Packet-switched data.

Mini-USB port *FME male for antenna* *Mini-SIM compartment*
RJ45 socket for input power and serial RS232 *LED*

Mobile station engine	HE910-DG
EU approval	CE-1909
3GPP	Release 6, 7
A-tick	

2 Safety Precautions

The following safety precautions must be observed whenever the Smart SAM3T modem is in operation or in service. Failure to comply with these precautions violates the safety standards of the design, manufacture and intended use of the product

- Switch off the Smart SAM3T modem :

- In hospitals or places where medical equipments may be in use.
- In an aircraft
- Refuelling points
- Explosive areas

- Restricted use of the Smart SAM3T modem

- Near any chemical plant
- Near any Fuel depot
- Areas with mobile phone warning signs

Respect national regulations on the use of cellular devices. Road safety always comes first

The Smart SAM3T modem receives and transmit radio frequency energy while switched on, therefore interference can occur if the Smart SAM3T is near TVs, radios, PCs or any inadequately shielded equipments.

3 Radio Frequency Exposure - SAR

The Smart SAM3T modem is a low-power transceiver, similar to a typical handheld GSM/GPRS/UMTS mobile phone. When it is turned on, it will emit low-level radio frequency energy.

There are different guidelines and standards around the world that govern the permitted levels of radio frequency exposure for general population. The levels include a safety margin to a human body.

The Specific Absorption rate (SAR) is a measure of the rate at which radio frequency energy is absorbed by the body when exposed to radio frequency electromagnetic field. The SAR value is determined at the highest certified power level in the laboratory conditions, but the actual SAR level of the transceiver while operating can be well below this value. This is because the transceiver is designed to use minimum power to connect to the network.

The Smart SAM3T modem is approved to use in applications where the ***antenna is placed more than 21cm from the body.***

For other applications, the integrator is responsible for the local SAR requirements.

4 WEEE Directive 2002/96/EC, Disposal of Old Electronic Equipment

This symbol  on the product indicates that this product shall not be treated as household waste . It must be placed at an appropriate collection point for the recycling of electrical and electronic equipments.

By ensuring the correct disposal of this equipment, it will help the environment and human's health. The recycling will help to conserve the natural resources.

The Smart SAM3T product is RoHS compliant

5 Packaging

5.1 5.1 Contents

The Smart SAM3T package consists of :

- A Smart SAM3T modem
- A data cable
- A Smart SAM3T short specification
- A Smart SAM3T User Guide

5.2 5.2 Packaging Box

The carton box diameter is 120mm x 95mm x 60mm
The Data cable is 2m long
The Label diameter is 50mm x 33mm

The Power supply is available on request. It is recommended that the Smart SAM3T is powered using a 12Vdc/1A power supply.

The antenna is also available on request. Please make sure the correct antenna is used to get optimised performance from the Smart SAM3T.

5.3 5.3 Production Label

Product Model: Smart SAM3T
Software : Version 1.C
Hardware : Revision2
IMEI
357164045098731
Made by: Intercel - N592

The production part number is located at the back of the Smart SAM3T, which includes:

- The product model
- The software Version
- The Hardware Version
- The IMEI number
- The manufacturer
- The part number

6 Functionality

6.1 General

The Smart SAM3T modem consists of an RJ45 socket for serial port and input power, an FME male antenna connector and a SIM holder. The LED indicator, located next to the SIM holder, indicates the Smart SAM3T operating status. It also has a USB port to download firmware.

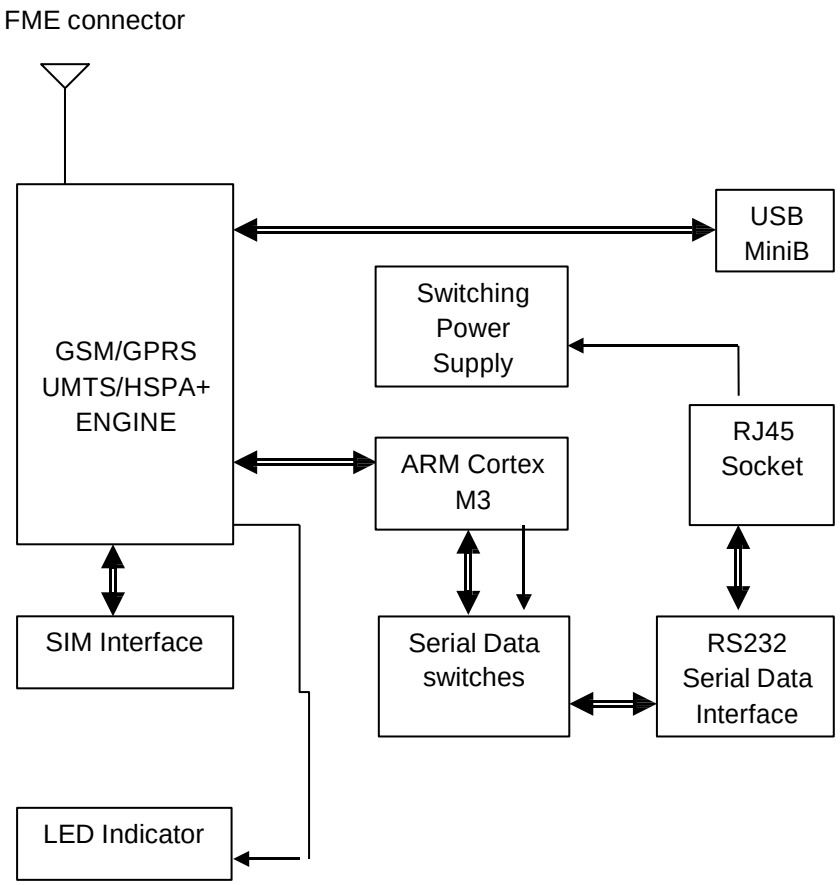

The** Smart **SAM3T Functional Block Diagram

6.2 RJ45 Socket

Pin	*Signals*	*Description*
1	VIN	Input voltage 5Vdc - 32Vdc
2	DCD	Data Carrier Detect
3	DTR/RI	Data terminal Ready/Ring Indicator
4	GND	Common Ground
5	RXD	Serial Data out of the Smart SAM3T
6	TXD	Serial Data into the Smart SAM3
7	CTS	Clear to Send
8	RTS	Ready to Send

6.3 Mini USB Connector

Pin	*Signal*
1	Vusb
2	D-
3	D+
4	N/C
5	GND

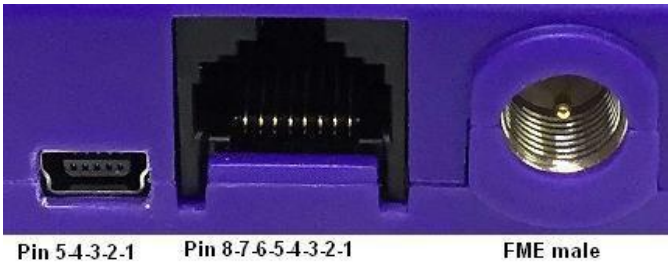

6.4 FME-Male 50Ω Antenna Connector

The FME male antenna connector is a 50Ω impedance antenna connector. The antenna used for the Smart SAM3T must have 50Ω impedance.

6.5 SIM Holder

The SIM holder is designed to accommodate a mini-SIM card. The SIM card can either be 3V or 1V8 SIM. To insert the SIM card, remove the door by sliding it back toward the end. Make sure the SIM card faces the right way as indicated on the box. Voltage levels over this SIM interface complies with 3GPP standards

6.6 LED Status

The LED indication has the following status for different SAMMODE:

SAMMODE=0

Led is handled by Module Software (factory default) with the following timings:

-Not registered: always on

-Registered in idle: blinking 1s on and 2s off

- Modem in a call: always on

SAMMODE=1

-Not registered : always on

-Modem initialising: 200ms on 200ms off

-Modem connected to PSD network (IP assigned): 100ms on 3s off

-Modem failed to connected to PSD network, timeout before reset: 100ms on 100ms off

-Modem in data transfer mode (online, serial port no longer accepting AT command): 100ms on 500ms off

SAMMODE=2

-Not registered : always on

-Modem initialising: 200ms on 200ms off

-Modem in CSD idle mode ready to receive incoming CSD call: 100ms on 1.5s off

-Modem in data transfer mode (online, serial port no longer accepting AT command): 100ms on 500ms off

6.7 6.6 Data Cable

The data cable is 2m long. It consists of an RJ45 plug, a DB9-female connector and a 2-wire input power.

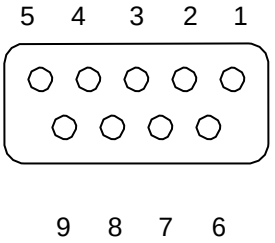

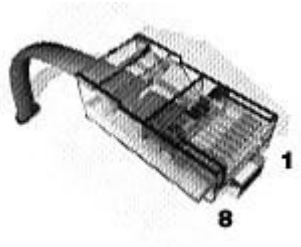

DB9	*Signals*		*RJ45*	*Description*
1	DCD	↔	2	Data Carrier Detect
2	RXD	↔	5	Serial Data out of the Smart SAM3T
3	TXD	↔	6	Serial Data into the Smart SAM3T
4	DTR		3	Not used
5	GND	↔	4	Common Ground
6	DSR			
7	RTS	↔	8	Ready to Send
8	CTS	↔	7	Clear to Send
9	RI	Not used		
			1	RED wire : Input voltage from 5Vdc to 32Vdc
			4	BLACK wire : Power Ground

7 Electrical Characteristics

7.1 7.1 Power Consumption (TBC)

Idle mode	29mA
GPRS full tx power	595mA
3G full tx power	525mA
Peak current requirement	2A

7.2 7.2 Receive Sensitivity

BAND	Typical (without Diversity)	Note
GSM 850/1900MHZ	-109.5 dBm	BER class II <2.44%
GSM 900MHZ	-109 dBm	BER class II <2.44%
DCS 1800MHZ	-110 dBm	BER class II <2.44%
WCDMA 800/850MHZ	-111 dBm	BER < 0.1%
WCDMA 900MHZ	-110 dBm	BER < 0.1%
WCDMA 2100MHZ	-111 dBm	BER < 0.1%

7.3 7.3 Conducted Transmit Power

Parameter	Min	Typical	Max
GSM900	+31dBm	+33dBm	+35dBm
DCS1800	+24dBm	+26dBm	+28dBm
WCDMA 800/850	+21dBm	+24dBm	+25dBm
WCDMA 900/2100	+21dBm	+24dBm	+25dBm

7.4 7.4 Main Antenna Specifications

Max cable loss	0.5dBm
Impedance	50Ω
VSWR recommended	2:1
VSWR absolute maximum	10:1

7.5 7.5 Environmental Characteristics

Operating temperature	-30°C to +85°C
Storage temperature	-40°C to +95°C
Humidity	90% relative humidity (non-condensing)

8. The Smart SAM3T TCP/IP Operation

The Smart SAM3T has a MCU (Microcontroller) to control the 3G module HE910, the Smart SAM3T can be operating in there different modes, defined by parameter SAMMODE:

-SAMMODE=0, modem is in dumb mode, when power on the MCU turn on the 3G module, check its baud rate, turn on LED and release control of the 3G module to the connecting device, AT commands can be send from serial port here after, the MCU keep monitor the 3G module Rx pin for AT$ commands and check time in the POLLPERIOD parameter (to reset itself and the 3G module.

-SAMMODE=1, modem is in GPRS or PSD (Packet Switch Data) smart mode, the MCU is in total control of the 3G module, on power up the software reads all parameters from flash and activates a GPSR connection, it then creates an UDP and a TCP socket to listen for data transfer connection, opens an UDP and a TCP socket to listen for remote AT commands connection, if programmed as TCP client it will tries to connect to a remote TCP server, the modem then stays in GPRS online idle state waiting for CSD call, SMS, UDP data or TCP connection, the software maintains GPRS connectivity by the mean of IP TRACE using POLLPERIOD parameter stored in flash.

-SAMMODE=2, modem is in CSD (Circuit Switch Data) smart mode, this mode is used if SIM card is not setup for GPRS, MCU is in total control of the 3G module, modem is always in waiting for CSD call or SMS.

The reason for using SAMMODE=1 for PSD and SAMMODE=2 for CSD is because it is not possible to configure the Smart SAM3T for simultaneous operation of PSD and CSD, when the Smart SAM3T (3G) is connected to PSD (IP mode), the modem status is busy when one try to make a data call to it, this is the behaviour the of the 3G network.

7.6 8.1 Communication Sockets

TCP Data: Socket connection allows transparent data to pass through from host computer to the modem serial port and vice versa, this operation is similar to the CSD data communication, in TCP server mode the socket will be disconnected after 5 minutes of no data transfer.

UDP Data: Socket connection allows transparent data to pass through from host computer to the modem serial port and vice versa, this operation is similar to the CSD data communication, a block of data received from a remote UDP server will open a 2 minutes window for data to be transfer from the serial port.

TCP AT Command: Socket connection allows a user from the host computer to send AT commands to the modem and receive its responses, socket will be disconnected after 5 minutes of no activity, and socket also can be used for remote firmware update.

UDP AT Command: Socket connection allows a user from the host computer to send AT commands to the modem and receive its responses, and socket also can be used for remote firmware update.

.

7.7 8.2 TCP/IP AT$ Commands

Communications parameters are stored in Flash using AT$PARAMETERS.

Parameters are defined as:

APN=Access Point Name

USERNAME=Username that may required with GPRS login

PASSWORD=Password that may required with GPRS login

LTCPPORT=Local TCP listening port

RTCPIP=Remote TCP server IP

RTCPPORT= Remote TCP server port

TCPMODE=0 or 1 (0 disable modem TCP client, 1 enable modem TCP client)

LUDPPORT=Local binding UDP port (modem listen for UDP data on this port)

RUDPIP=Remote binding UDP IP (modem only accept data from this IP)

RUDPPORT=Remote binding UDP port (modem send UDP data to this port)

PINGIP=If set, modem send PING packet to this IP to check for PSD connectivity.

POLLPERIOD=Modem use this time to send TRACE or P ING packet to check for PSD connectivity.

SBREAKTIME=Serial port break time, modem will wait for this break in serial port transmission before packetize the data and send.

MBREAKTIME=Modem or GSM module serial break time, use to adjust the way the modem rebuild long IP packet from fragments of CMUX frames.

BAUDRATE=Serial port baud rate.

DATALEN=Serial port data bits 7 or 8

PARITY= NONE or ODD or EVEN

SAMMODE=0 for standard modem, 1 for PSD mode, 2 for CSD mode.

All parameters can be programmed all at once.

AT$PARAMETERS=APN=telstra.extranet,USERNAME=intercel,PASSWORD=mach,LTCPPORT=10000,RTCPIP=203.45.1.236,RTCPPORT=10000,TCPMODE=,LUDPPORT=20000,RUDPIP=203.45.1.236,RUDPPO

RT=20000,POLLPERIOD=60,SBREAKTIME=100,MBREAKTIME=5,BAUDRATE=115200,DATALEN=8,PARITY=NONE,SAMMODE=0

Saved parameters to flash...

OK

Or a few parameters or one at a time.

AT$PARAMETERS=APN=telstra.extranet,USERNAME=intercel,PASSWORD=mach

Saved parameters to flash...

OK

AT$PARAMETERS=LTCPPORT=10000,RTCPIP=203.45.1.236,RTCPPORT=10000,TCPMODE=,LUDPPORT=20000,RUDPIP=203.45.1.236,RUDPPORT=20000

Saved parameters to flash...

OK

AT$PARAMETERS=POLLPERIOD=60,SBREAKTIME=100,MBREAKTIME=5,BAUDRATE=115200,DATALEN=8,PARITY=NONE

Saved parameters to flash...

OK

AT$PARAMETERS=SAMMODE=0

Saved parameters to flash...

OK

AT$PARAMETERS?
$PARAMETERS:
APN: telstra.extranet
USERNAME: intercel
PASSWORD: mach
LTCPPORT: 10000
RTCPIP: 203.45.1.236
RTCPPORT: 10000
TCPMODE: 0
LUDPPORT: 20000
RUDPIP: 203.45.1.236
RUDPPORT: 20000

BAUDRATE: 115200
DATALEN: 8
PARITY: NONE
POLLPERIOD: 60
SBREAKTIME: 100
MBREAKTIME: 5
SAMMODE: 0
OK

AT$UDPCONNECT

If modem is already allocated an IP address, this command will put the modem in UDP data mode, modem DCD pin go high, data from serial will be packetized into UDP packet and send to remote UDP server (UDP settings must be set prior), modem will return to AT Command mode if it receiving no UDP data in 30 seconds.

If modem has no IP address (CSD mode or SAMMODE=2), the modem will connect to PSD and go into UDP data mode, modem DCD pin go high, data from serial will be packetized into UDP packet and send to remote UDP server (UDP settings must be set prior), modem will reset and return to CSD mode if it receiving no UDP data in 30 seconds.

AT$TCPCONNECT

If modem is already allocated an IP address, this command will make a TCP client connection to the remote TCP server, modem will return to AT Command mode if it receives no TCP ACK in 30 seconds.

If modem has no IP address (CSD mode or SAMMODE=2), the modem will connect to PSD and make a TCP client connection to the remote TCP server, modem will reset and return to CSD mode if it receives no TCP ACK in 30 seconds.

AT$DDNS

Use to setup parameters required for Dynamic DNS updating.

Parameters are defined as:

DDNSENABLE= 0 or 1 (0 disable, 1 enable)

DDNSHOST=Host name

DDNSUSERNAME=DNNS account name

DDNSPASSWORD=DDNS account password

DDNSSERVER=DDNS server

DDNSSTRING: Only need to change from default in some circumstances with Intercel support

DDNSAUTH: Only need to change from default in some circumstances with Intercel support

DDNSAGENT: Only need to change from default in some circumstances with Intercel support

PDNSIP=Primary DNS, leave blank if not using your own DNS server, not a requirement for DDNS.

SDNSIP=Secondary DNS, leave blank if not using your own DNS server, not a requirement for DDNS

DNSTTL= DNS Time To Live in minutes before updating of DNS entries, not a requirement for DDNS.

AT$DDNS=PDNSIP=8.8.8.8,SDNSIP=8.8.4.4,DNSTTL=240,DDNSENABLE=0,DDNSHOST=intercelau.ddns.net,DDNSUSERNAME=intercelau,DDNSPASSWORD=123456789,DDNSSERVER=dynupdate.noip.com,DDNSSTRING=GET/nic/update?hostname=%s&myip=%sHTTP/1.0,DDNSAUTH=Authorization: Basic%s,DDNSAGENT=User-Agent:SAM3T/1.0 intercel@intercel.com.au

Saved parameters to flash...

OK

AT$DDNS?

$DDNS:
DDNSENABLE: 0
DDNSHOST: intercelau.ddns.net
DDNSUSERNAME: van.phamus@yahoo.com
DDNSPASSWORD: 123456789
DDNSSERVER: dynupdate.no-ip.com
DDNSSTRING: GET /nic/update?hostname=%s&myip=%s HTTP/1.0
DDNSAUTH: Authorization: Basic %s
DDNSAGENT: User-Agent: SAM3T/1.0 intercel@intercel.com.au
PDNSIP: 8.8.8.8
SDNSIP: 8.8.4.4
DNSTTL: 240

OK

AT$DDNSTEST

Use to force a manual updating of IP to the DDNS server, all required parameters must be set beforehand.

AT$DDNSTEST

$DDNSTEST: Starting....

$DDNSTEST: Resolving dynupdate.no-ip.com....

Connecting to DDNS dynupdate.no-ip.com ....

Connected to DDNS dynupdate.no-ip.com
HTTP/1.1 200 OK
Date: Tue, 02 Sep 2014 00:33:32 GMT
Server: Apache/2
Content-Location: update.php
Vary: negotiate
TCN: choice
Content-Length: 19
Connection: close
Content-Type: text/plain; charset=UTF-8

good 123.209.169.62
DDNS host intercelau.ddns.net updated with 123.209.169.62

OK

AT$ACCESS

Use to setup parameters required for remote access.

Parameters are defined as:

IPBLOCK=0 or 1 (0 disable, 1 enable remote IP access from REMOTEIP1-REMOTEIP4)

REMOTEIP1= nnn.nnn.nnn.nnn

REMOTEIP2= nnn.nnn.nnn.nnn

REMOTEIP3= nnn.nnn.nnn.nnn

REMOTEIP4= nnn.nnn.nnn.nnn

SMSBLOCK=0 or 1 (0 disable, 1 enable remote SMS access from REMOTESMS1-REMOTESMS4)

REMOTESMS1= ccnnnnnnnnn cc for country code

REMOTESMS2= ccnnnnnnnnn

REMOTESMS3= ccnnnnnnnnn

REMOTESMS4= ccnnnnnnnnn

DIALBLOCK= 0 or 1 (0 disable, 1 enable remote dialling access from REMOTEDIAL1-REMOTEDIAL4)

REMOTEDIAL1= acnnnnnnnn ac for area code

REMOTEDIAL2= acnnnnnnnn

REMOTEDIAL3= acnnnnnnnn

REMOTEDIAL4= acnnnnnnnn

AT$ACCESS=IPBLOCK=1,REMOTEIP1=10.64.24.2,REMOTEIP2=,REMOTEIP3=,REMOTEIP4=,SMSBLOCK=1,REMOTESMS1=0413586218,REMOTESMS2=,REMOTESMS3=,REMOTESMS4=,DIALBLOCK=1,REMOTEDIAL1=0395612959,REMOTEDIAL2=,REMOTEDIAL3=,REMOTEDIAL4=

Saved parameters to flash...

OK

AT$ACCESS?

$ACCESS:
IPBLOCK: 1
REMOTEIP1: 10.64.24.2
REMOTEIP2:
REMOTEIP3:
REMOTEIP4:
SMSBLOCK: 1
REMOTESMS1: 0413586218
REMOTESMS2:
REMOTESMS3:
REMOTESMS4:
DIALBLOCK: 1
REMOTEDIAL1: 0395612959
REMOTEDIAL2:
REMOTEDIAL3:
REMOTEDIAL4:

OK

AT$LGSMS

Use to program parameters for last gasp SMS.

Parameters are defined as:

LGSMSMSG=SMS message text, default is "SAM3T low power detected..."

LGSMSNO=SMS phone number

AT$LGSMS= LGSMSMSG= SAM3T power supply is low...., LGSMSNO=+61418505361

Saved parameters to flash...

OK

AT$LGSMS?
$LGSMS:
LGSMSMSG: SAM3T power supply is low....
LGSMSNO: +61418505361

OK

AT$LOGIN

Use to setup login details for remote sending of AT commands, parameters and software updating; password is encrypted so remote login required PC software Smart SAM3T Terminal.

AT$LOGOFF

Use to log off remote access instantly; modem will lock out remote access that has been idled for 120 seconds.

AT$IP

Use to return the allocated IP address of the current GPRS connection

AT$IP

$IP: 123.209.157.9

OK

AT$VERSION

This command returns the TCP/IP software version.

AT$VERSION

SAM3T V1.51 06/05/15 10:51

OK

AT$RESET

Use to remotely reset the modem, normally after sending of new parameters

AT$RESET

SAM Reset...

OK

AT$SMSTOSERIALON

This command allows the connecting device to receive SMS notification for 300s: e.g. "+CMTI: "SM",1", the connecting device must send AT+CMGR to read SMS and AT+CMGD to delete it, during this 300s period, modem will not able to decode AT$ commands sending to it over SMS.

AT$FOTA

Use to start FOTA (3G module Firmware Download Over The Air).

AT$FOTA=FTP_Server,FTP_Username,FTP_Password,FTP_Path,FTP_Filename

FTP_Server: FTP server in dot format nnn.nnn.nnn.nnn

FTP_Username: Maximum length 100

FTP_Password: Maximum length 100

FTP_Path: Maximum length 50

FTP_Filename: Maximum length 50

AT$FOTA=120.157.48.51,vanpham,Intercel,/SAM3T/HE910/,Delta.bin.env

OK

AT$DOTA

Use to start DOTA (Modem software Download Over The Air).

AT$DOTA=FTP_Server,FTP_Username,FTP_Password,FTP_Path,FTP_Filename

FTP_Server: FTP server in dot format nnn.nnn.nnn.nnn

FTP_Username: Maximum length 100

FTP_Password: Maximum length 100

FTP_Path: Maximum length 50

FTP_Filename: Maximum length 50

AT$DOTA=120.157.48.51,vanpham,Intercel,/SAM3T/sam3t_v151.bin

OK

AT$GETLOG

Use to check read logged events from flash.

Read all logged events:

AT$GETLOG
$GETLOG:
1 2015/04/08 13:08:25+40 257 Software start
2 2015/04/08 13:08:30+40 259 HE910_OFF
3 2015/04/08 13:08:36+40 258 HE910_ON
4 2015/04/08 13:08:42+40 288 NW registered
.....
249 2015/04/09 10:52:19+40 320 $version.
250 2015/04/09 11:17:10+40 320 $getlog.

OK

Read last 5 events:

AT$GETLOG=5
$GETLOG:
246 2015/04/09 10:26:15+40 288 NW registered
247 2015/04/09 10:26:16+40 262 /04/09,10:26:16
248 2015/04/09 10:52:19+40 320 $version.
249 2015/04/09 11:17:10+40 320 $getlog.
250 2015/04/09 11:21:13+40 320 $getlog=5.

OK

AT$CLEARLOG

Use to clear logged events from flash.

AT$CLEARLOG

OK

AT$MODEMLOG

Use to enable and disable events logging,

AT$MODEMLOG=1 enable logging

AT$MODEMLOG=0 disable logging

AT$MODEMLOG?

$MODEMLOG: 1

OK

AT$DEFAULT

Use to restore modem's parameters to default settings.

AT$DEFAULT

OK

7.8 8.3 CSD Call Escape Sequence

During CSD call to the Smart SAM3T modem, send three consecutive EscEscEsc or hex number sequence 0x1B 0x1B 0x1B to switch the modem between data mode and remote AT commands mode.

9. Firmware Upgrade

7.9 9.1 The 3G Module Firmware

The module firmware can be upgraded via the modem's serial port, or can be upgraded over-the-air (FOTA) by instructing it to download from a FTP server.

7.10 9.2 The Modem's Controller Software

The modem's software can be upgraded over the JTAG port using the SAM-BA software tool from ATMEL.

The modem software and parameters can be upgraded over the serial port, GPRS, CSD or SMS (parameters only) using SAM3X Terminal program running on PC.

For mass upgrade of modem's software, the new software can be loaded onto a FTP server and the modem is instructed to download the new software from this FTP server.

Notes

-In SAMMODE=0, after power on the MCU turns on the 3G module, checks its baud rate, turns on LED before releases control of the 3G module to the connecting device, all this take between 5 to 10 seconds, so the modem is only ready for AT commands here after.

-In SAMMODE=1, the modem take 30 to 60 seconds to connect to GPRS, modem only response to AT commands from serial port once it is connected to GPRS or after it has failed , if it failed to connect it will reset after 120 seconds.

-In SAMMODE=2, the MCU take about 20 seconds to set up the 3G module , the modem only response to AT commands from serial port after setting up is finished.

-In SAMMODE 1 and 2 if the Smart SAM3T modem is powered up without a SIM card it will go into AT command mode after 20 seconds.

-The parameter POLLPERIOD which keep the time in minute which when expired will reset the modem if SAMMODE=0 or SAMMODE=2, if SAMMODE=1 for PSD mode the modem will use this time to send TRACE IP packet to check for network connectivity.

-In SAMMODE=1 and 2 the modem can be reset remotely by calling the voice number.

3G MODEM

SAM3T

www.wavecom.com.au

Contact Us

South Australia
257 Grange Road
FINDON, SA 5023
P: +61 08 8243 3500
F: +61 08 8243 3501
E: sales@wavecom.com.au

Victoria
772A Station Street
BOX HILL, VIC 3128
P: +61 03 9897 4711
F: +61 03 9897 4766
E: salesvic@wavecom.com.au

Western Australia
Unit 2-17 Casino Street
Welshpool, WA 6106
P: +61 08 9353 1943
F: +61 08 9353 4319
E: saleswa@wavecom.com.au

Distributed by

WAVECOM INSTRUMENTS

www.wavecom.com.au